Octal TMS320C6203 Processor PMC/VIM - VME

General Information

Designed for applications requiring extremely high-speed signal processing and data transfers, the Model 4293 features eight Texas Instruments TMS320C6203 DSPs operating at 300 MHz and delivering a combined peak processing capability of 19,200 MIPS.

TMS320C6203 DSP

As a member of the C6000 family, the C6203 utilizes TI's new 0.15 micron process which delivers 896 kB of on-chip SRAM, 512 kB for data and 384 kB for program, eliminating the need for external memory access in many applications.

The VLIW engine executes up to eight instructions in a single 300 MHz clock cycle, delivering up to 2400 MIPS. The powerful DMA controller transfers data to peripherals over dual 32-bit external data buses at rates as high as 600 MB/sec. Three serial ports easily support popular telecom interfaces.

Overall Circuit Description

Four identical dual processor nodes contain interface and memory resources ideally matching the I/O capabilities of the C6203 to high-performance system components.

Each node contains two C6203 devices, a master and a coprocessor, both equipped with local SDRAM and FLASH memory.

The master controls the VIM high-speed mezzanine interface, interprocessor links, a dedicated bus I/O channel, and connections to powerful shared board resources. It moves data in and out of the internal data and program memory resources of the coprocessor and controls its execution.

The coprocessor and its private external SDRAM can be used very effectively to off-load compute-intensive signal processing ➤

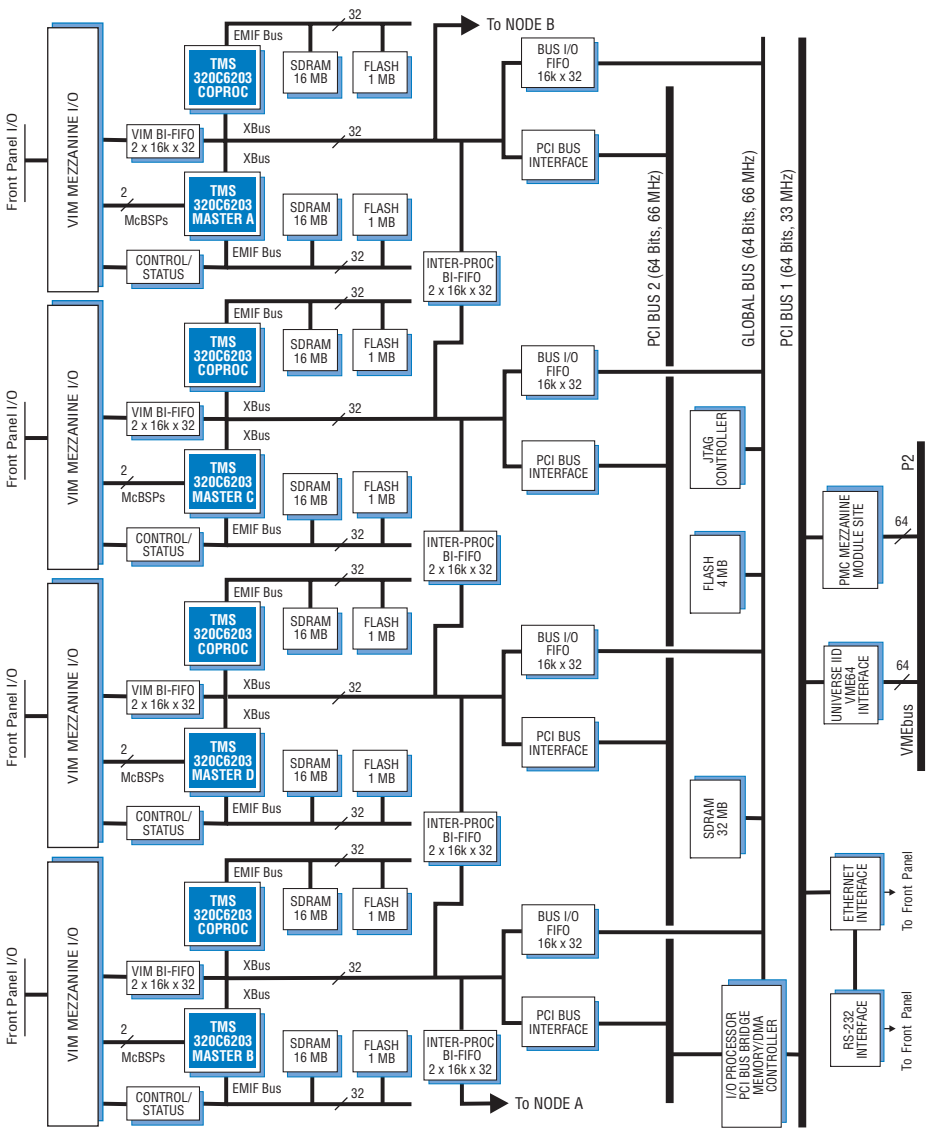

Features

- Eight 300 MHz TMS320C6203 DSPs
- 19,200 MIPS peak processing power
- High-performance PMC and VIM mezzanine module sites
- Four 300 MB/sec VIM mezzanine I/O BI-FIFOs
- Four 300 MB/sec interprocessor BI-FIFOs
- Four 300 MB/sec Bus I/O FIFOs
- Eight 8 MB or 16 MB SDRAMs with 600 MB/sec transfer rates
- 32 MB of shared global SDRAM
- VME64 master/slave interface

Support Software

Pentek's **SwiftNet** supports a network of distributed VMEbus systems and allows the developer to run development tools on the host, while maintaining remote access to the VMEbus system.

Pentek's **ReadyFlow** Board Support Libraries reduce development time by providing C-language callable functions for hardware initialization, control and operation of board resources.

TI's **Code Composer Studio** provides a comprehensive set of tools for software development including an optimizing C Compiler, an interactive debugger, the DSP/BIOS operating system and an assortment of profiling and optimizing tools.

Ordering Information

Model	Description
4293	Octal C6203 Processor PMC/VIM - VME
Options:	
-320	16 kB VIM and IP BI-FIFO, 16 kB Bus I/O FIFO
-340	16 MB local SDRAM (8 MB std.)

* Contact Pentek for PMC compatibility

➤ tasks from the master. When each task is completed, the coprocessor can notify the master efficiently through an interrupt.

VIM Mezzanine

Each dual processor node is equipped with its own VIM connector, providing three types of interfaces.

A high-speed synchronous bidirectional FIFO (BI-FIFO) buffers 32-bit parallel data transfers between the mezzanine and the master C6203's expansion bus (Xbus) at rates up to 300 MB/sec. Two of the master C6203's 50 Mbit/sec synchronous serial ports are also brought to the VIM mezzanine connector. The third serial port joins all eight processors for an additional link. The External Memory Interface (EMIF) bus of the master C6203 provides memory-mapped control and status functions to the mezzanine circuitry.

Local Memory

Two types of local memory resources are provided for each C6203: up to a 16 MB SDRAM and a nonvolatile 1 MB FLASH memory for initialization, self-test and boot code.

Interprocessor BI-FIFOs

Because the C6203 includes no interprocessor communication links, the Model 4293 features four bidirectional FIFOs joining the EXP buses of each processor node in a ring structure. Each master C6203 can send and receive interprocessor data blocks at 300 MB/sec without having to arbitrate for a shared resource.

Bus I/O FIFOs

By using private Bus I/O FIFOs, each master processor can transfer blocks of data from global resources including RACEway, global SDRAM, VMEbus and the PMC site. These FIFOs eliminate wait cycles by effectively decoupling the C6203's from these resources and allowing 300 MB/sec block transfers to the nodes.

PCI Master Interface

Each master C6203 can master the PCI bus for read/write access to RACEway, VMEbus, global SDRAM and the PMC site.

Global SDRAM

Serving as a convenient shared resource for staging data, the 32 MB global SDRAM is accessible from all four master C6203's, the VMEbus, RACEway and the PMC site.

Ethernet/RS-232 Interface

Front panel 100Base-T and RS-232 interfaces provide a gateway for debugging during development, and data transfers at run time.

PMC Site

The PCI Mezzanine Card (PMC) module site accepts most industry-standard modules for a wide variety of interface and communication functions. The PMC module is accessible from all four master C6203's and from the VMEbus.

Peripheral I/O

Model 4293 may be equipped with two VIM-2 modules, either identical or providing different functions; one VIM-4 module; or one VIM-2 module in the upper position and one PMC module in the lower position.

VME64 Interface

All four master C6203's can master the VMEbus using the industry standard Universe II VME64 interface chip. As a VMEbus slave, the Model 4293 presents the global SDRAM, the four Bus I/O BI-FIFOs, and the PMC site as memory mapped resources.

Specifications

Processor Node Resources: 4 total
Processors: two Texas Instruments TMS320C6203's per node
Processor Clock: 300 MHz
SDRAM: Dual 4M x 32
FLASH: Dual 1M x 8
Mezzanine: VIM site
Mezzanine BI-FIFO: 2 x 1k x 32; 2 x 16k x 32 optional
Interprocessor BI-FIFO: 2 x 1k x 32; 2 x 16k x 32 optional
Bus I/O FIFO: 1k x 32; 16k x 32 optional
Shared Global Resources:
Global SDRAM: 4M x 64
FLASH: 4M x 8
VME64: Tundra Universe II master/slave, slot 1 controller
PMC Module Site: 64 bit, 33 MHz, 5 V
Front Panel Interfaces: 100Base-T, RS-232
Size: standard 6U VMEbus board, single slot; board 160 mm (6.3 in.) x 233.5 mm (9.2 in.), panel 0.8 in. wide

Pentek, Inc. One Park Way ◆ Upper Saddle River ◆ New Jersey 07458
Tel: 201·818·5900 ◆ Fax: 201·818·5904 ◆ Email: info@pentek.com
www.pentek.com